JLAB-TN-05-006
02–February-2005
Joseph Grames & Danny Machie

Worksheet for Measuring the Location of the Gun2 and Gun3 Solenoid and Correction Magnets

The solenoid and correction magnets on either the horizontal Gun2 or Gun3 beam line are sometimes moved for the purpose of beam optics design or vacuum chamber work. A worksheet has been created to help the optics group reconcile the location of these magnets relative to the photocathode and 15 degree bend magnet.

Motivation

The solenoid and correction magnets on either the horizontal Gun2 or Gun3 beam line are sometimes moved for the purpose of beam optics design or vacuum chamber work. A worksheet has been created to help the optics group reconcile the location of these magnets relative to the photocathode and 15 degree bend magnet.

Procedure

Step 1:

The figure below shows five reference points (A,B,C,D,E) along the Gun2 beam line helpful to locate the Gun2 solenoid(s) and correction magnets. The Gun3 beam line is vertically inverted from the figure shown below. With a tape measure, go to the tunnel and identify these points.

- Point A – The plane of the photocathode (which goes to high voltage when running).
- Point B – The plane of the anode (which is always at ground potential).
- Point C – The face of the large gun chamber flange.
- Point D – The midpoint of the flange joint upstream of the large manual valve.
- Point E – The center of the 15˚ dipole (which intersects the Gun2 & Gun3 beam lines).

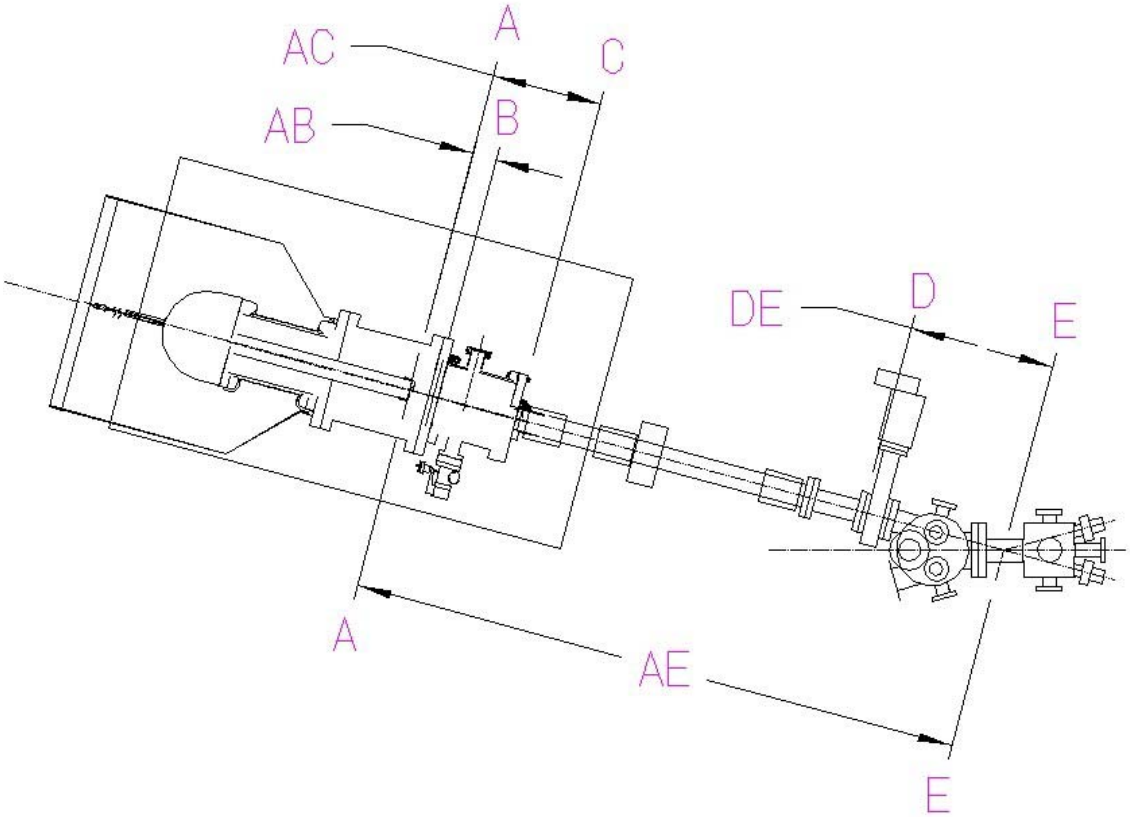

Step 2:

Use a tape measure to record the distance between each desired magnet and either Point C or D.

Magnet Name	Comment (e.g., center or edge)	To Point C [inches]	To Point D [inches]

Step 3:

Using the known distances between points A, B, C, D and E, shown below, calculate the appropriate location of the magnetic elements for your model.

- The distance from Point A to Point B is 2.710 inches.
- The distance from Point A to Point C is 12.270 inches.
- The distance from Point A to Point E is 68.390 inches.
- The distance from Point D to Point E is 16.248 inches.

Conclusion

Hopefully, this worksheet will help make the process of updating the various optics models easy and accurate.