LLRF Tests in the FEL and CEBAF with the Cornell Digital LLRF System

K. Davis, C. Grenoble, A. Hofler, *C. Hovater*, T. Plawski , and T. Powers, Jefferson Lab;
S. Belomestnykh, R. Kaplan, M. Liepe, Cornell University

Introduction

A collaboration between Jefferson Lab and Cornell was formally established in the summer of 2004 to test the Cornell digital Low Level RF (LLRF) system on a high Qe cavity in an Energy Recovery Linac (ERL) and on a high Qe cavity under CEBAF like beam loading. The tests took place over the fall and winter in the Jefferson Lab FEL. To accommodate the Cornell LLRF system, Jefferson Lab provided a new transceiver and Clock/Master oscillator so that the Cornell system could synchronize with our cavity frequency and master oscillator. The tests were accomplished over three different weeks. The first week was devoted to initial setup and check out with no high power RF. The second week involved tests with high power RF without beam in a cavity and the third week included tests with beam. The tests were successful for both institutions. For Jefferson Lab they verified that a digital LLRF system is a viable method for controlling a high Qe cavity given the stringent demands for field stability. Meeting tight field stability requirements on high Qe cavities was viewed as a potential technical risk for digital LLRF systems in the 12 GEV upgrade and therefore verification was an R&D goal for the 12 GEV project.

System Components

The Cornell system was easily attached parasitically to the JLAB LLRF system through a newly constructed transceiver and master oscillator. Figure 1 shows a block diagram of the hybrid system. Cavity interlocks remained inside the JLAB LLRF system and a PIN switch was used to effectively kill the RF drive if a fault occurred. Resonance control used the JLAB stepper motor and piezo tuner (PZT). For the stepper motor, Cornell purchased a driver and configured the interface from its system to Jefferson Lab's. In the case of the PZT, JLAB purchased an amplifier to drive the PZT and then developed an interface to the Cornell DAC.

The Cornell LLRF system is a digital system that utilizes four fast front end ADC's, a Xlinix FPGA, two fast DACs and an Analog Devices quadrature modulator [1]. Figure 2 shows a block diagram of the Cornell LLRF system as it is installed on the CESR ring. All fast algorithms and PID control, are coded in VHDL for the FPGA. For slower computations (resonance control, feed forward) an Analog devices digital signal processor (DSP) is used. The core of the system resides in two VME cards. The system is controlled through a Matlab GUI.

The Cornell system operates at completely different frequencies than the JLAB LLRF system. It uses an Intermediate frequency (IF) of 11.9 MHz and a clock frequency of four times that, 47.6 MHz. Both of these had to be generated and then synchronously phase

locked to the existing JLAB master oscillator. In addition a local oscillator frequency of 1485.1 MHz was needed. Figure 3 shows a block diagram of the synthesizer. One of the prospects for Cornell was the opportunity to operate their system with an improved clock, exhibiting very low phase noise (or timing jitter). Great care was taken in the design of the multiple frequency synthesizer to achieve the lowest phase noise possible. The cavity residual field phase stability is directly related to the phase noise of the clock.

Because of the IF frequency, the up conversion - down conversion was also different than for JLAB LLRF. Therefore a new transceiver was designed and built to mate the 1497 MHz cavity frequency with the Cornell IF. As is typical with modern LLRF systems, it included a transmitted power, forward power, reflected power and klystron drive signal. Figure 4 shows a block diagram of the transceiver. The only real requirement for the transceiver was that the transmitted power mixer needed to be very linear. In this case a high IP3 (3rd intermodulation product) mixer was chosen.

The location chosen for the tests was cavity 3 in the FEL3 cryomodule. The cavity is considered a prototype CEBAF upgrade cavity and has many features that will be encountered in the upgraded cavities: Qe $=2x10^7$, seven cells, similar microphonics, piezo tuners, low hysteresis mechanical tuners, and high gradient ~ 15 MV/m capabilities. The FEL is a convenient test bed since their operating schedule allowed us to operate in the evenings unhindered. Note that cavity background microphonics and mechanical modes were thoroughly measured prior to starting RF tests.

Initial Cavity Tests

The first set of tests on a cavity took place the week of November 8. The objectives for this session were:

- Field Control: Since this would be the first time a JLAB style cavity was operated with a digital LLRF system, we wanted to see if a digital system has the gain-bandwidth to meet the our field stability requirements [2].
- RF Fault Recovery: A problem with high gradient operation is the large Lorentz detuning the cavity goes through from no gradient to very high gradients (20 MV/m+). The Lorentz detuning goes as the square of the gradient; therefore, it is possible for the cavity to tune over many bandwidths (>5) during start-up. A way to do this quickly is to use a PZT that compensates for the Lorentz effect. We wanted to demonstrate this ability.
- RF Recovery From a CHL Crash: Presently we can recover cavities that are ~ 5 kHz away from 1497 MHz. We wanted to test the digital LLRF to see how far it could recover a detuned cavity.

The cavity was operated open loop first and then locked at a low gradient, ~ 3 MV/m, for gain optimization. Once the gains were optimized, the cavity gradient was raised to 12.3 MV/m and cavity field stability data was collected. Field stability was measured using two independent measurements. The first method used data from the DSP of the Cornell LLRF, and the second used the detectors of the existing JLAB RF control. A

third was tried using active detectors external to each system, but it had not been perfected at the time of the first cavity tests. The first two methods for the most part were in agreement. Typically the Cornell and JLAB methods agreed for the initial tests. Table 1 shows the results of measurements, with the field requirements.

Table 1

	Cornell (rms.)	JLAB (rms.)	Requirement (rms.)
Phase	0.03	0.019	0.24
Amplitude	1.5×10^{-4}	1.7×10^{-4}	4.5×10^{-4}

Once the cw field control was optimized we began RF fault recovery tests. This was a little trickier because the algorithm had to be somewhat empirically tuned for the mechanical tuner and PZT. Even at this relatively low gradient (12.3 MV/m), the cavity (FEL3-3) can not be turned on from 0 to 12.3 MV/m without a slow ramp up to allow the mechanical tuner to compensate. The Lorentz detuning is approximately 2 bandwidths, and the klystron does not have the head room to absorb this much detuning.

The first recovery tests used the mechanical tuner only. Typically, it takes about 30 seconds for an operator to recover this cavity. We were able to get it to ramp in about 15 seconds, a factor two improvement. Adding the PZT to the turn on algorithm improved the speed by two orders of magnitude. The PZT was activated with feed-forward compensation and then feedback once gradient was obtained. The cavity was able to get back to stable gradient in 80 ms. Figure 5 shows a graph of the gradient ramp. It should be noted there was very little forward power over shoot and there is potential to improve the turn on speed with adjustments in the firmware.

RF Recovery from a CHL crash was simulated by detuning the cavity approximately 30 kHz away from 1497 MHz. It took about 5 minutes for the algorithm to find the cavity and tune it back. Most of the time was associated with the movement of the tuner since it had to come back more than 100,000 steps.

As a final part of the initial cavity tests, Cornell requested that the cavity Qe be adjusted higher. Previously, a three stub tuner had been placed in the wave guide for this purpose. The Qe was adjusted from 2×10^7 to $\sim 1 \times 10^8$. The Cornell ERL proposal calls for operating cavities at this Qe. If successful the power requirements can be greatly reduced (< 1 kW) for the ERL cavities, reducing the overall project costs. Cavity field stability at the higher Qe was similar to previous results. The RF recovery tests were slower but more impressive. At a Qe of 1×10^8, the number of bandwidths to reach 12.3 MV/m is 10. Figure 6 shows the gradient ramp to 12.3 MV/m at this Qe.

An interesting aside that we were not able to follow up was the effect on gradient stability that the PZT had at the higher Qe. Figure 7 shows a strip tool of the gradient (green). For this test, the system was operated in open loop (no active electronic feedback). The first part of the graph shows the system with only the stepper motor mechanical resonance control on. At the 60 second point, the PZT was added to the

resonance control which greatly stabilized the gradient. The conclusion is that the amount of power that the klystron must use to compensate for background microphonics can be reduced by actively employing the PZT in the resonance/field control.

Beam Tests

FEL

Beam tests commenced the week of January 24th in the FEL. JLAB's goal was to operate a digital LLRF control system under beam loading conditions similar to what one would expect for CEBAF. Cornell's goals were to continue their measurements at both Qe's while measuring field stability in an energy recovery linac. Since the FEL was already set up in energy recovery mode, we started the Cornell measurements at the lower Qe ($2x10^7$). We took data at points +/- 40 degrees off of crest in 10 degree increments while operating 5 mA of energy recovered beam. Field stability was good, as expected.

Once the ERL tests were complete, we went to straight ahead mode (non-ERL) and brought up CEBAF-like beam (~ 400 uA cw). It was assumed that we could extend the beam pulse to ~ 5 ms and run 400 uA peak current. The FEL beam dumps are limited to 200 watts, which precluded us from running true cw beam conditions. In addition, the FEL machine protection system only allows certain beam pulse modes. This made producing a CEBAF-like beam structure for an appropriate length of time (> 1 ms) difficult. We made some pulse measurements at 350 us, but it was obvious that we could not accurately represent a cw-like beam situation with the FEL. At this point, we decided to move the experiment to the CEBAF machine once the high Qe measurements were completed.

The Cornell measurements continued at the higher Qe and again measured field stability at off crest phases.

CEBAF

Beam tests moved to CEBAF, and the LLRF system was set up to control cavity SL20-2 since it had a relatively high maximum gradient 12 MV/m, and its Qe could be adjusted. It is an old style cryomodule; therefore, there would be no active resonance control. The old style tuner could not easily be made to work with the Cornell LLRF system, nor does the cavity have a PZT. Since these cavities are fairly stable, we decided to keep it on tune manually while the tests proceeded. The cavity Qe was adjusted from ~ $8x10^6$ to $2x10^7$ (after the tests it was determined that the actual Qe was $4x10^7$!).

The cavity was first operated in open loop. At first look, it appeared as if one of the clocks or oscillators was slipping. The phase noise in the open loop system was huge (greater than +/- 70 degrees was observed). After a quick investigation, we concluded this was a real microphonic effect and that by increasing the Qe we had increased the effect by ~ 3 (or by a factor of 5 as we found out later!). It turns out that SL20 is one of the most microphonically active cryomodules in CEBAF. At an open loop gradient of 3 MV/m, the cavity was tuned to resonance, and after some gain adjustments the loop was locked. The cavity gradient was slowly raised to 10 MV/m with manual tuning. We ran at

10 MV/m because there was concern the cavity might trip off on an RF fault (In addition given the Qe and the microphonics observed we felt this was a good place to stop).

The cavity was operated at currents up to 400 uA and field stability was measured. Table 2 shows both the JLAB and Cornell measurements. The Cornell measurements all surpassed the CEBAF stability requirements. The JLAB measurements either met the requirements or were slightly better. We are still investigating why the different methods produced different results. The JLAB measurements were external measurements while the Cornell measurements were actual measurements of the error signals in their feedback loop. Even with the disagreement we are very pleased with the results.

Table 2

Beam Current	Phase (degrees)	rms.	Amplitude	rms.
	Cornell	JLAB	Cornell	JLAB
0 μA	0.017	0.21	1.7×10^{-4}	4.2×10^{-4}
200 μA	0.017	0.17	1.8×10^{-4}	2.5×10^{-4}
300 μA	0.018	0.22	1.7×10^{-4}	3.1×10^{-4}
400 μA	0.02	0.179	2.3×10^{-4}	3.1×10^{-4}

Summary

The JLAB-Cornell collaboration was a very fruitful venture for both parties. Cornell was able to verify performance of their prototype LLRF system on an ERL under conditions that it may see in the future. Jefferson Lab was able to demonstrate that a digital LLRF control system could operate and maintain required field control under typical CEBAF beam loading. Second, we showed that a cavity could be recovered quickly (< 100 ms) even under a large Lorentz detuning upon start up. Lastly, we demonstrated a resonance hunting algorithm that recovered a cavity from 30 kHz away. The overall outcome from these tests is that Jefferson Lab has greatly reduced the technical risk for the LLRF portion of the 12 GEV upgrade.

References

1. M. Leipe et al, "A new Digital Control System for CESR-c and the Cornell ERL" SRF Workshop 2003, Lubeck Germany, September 2003.
2. H. Areti, et al, "RF Requirements for the CEBAF Energy Upgrade" http://www.jlab.org/accel/RF/

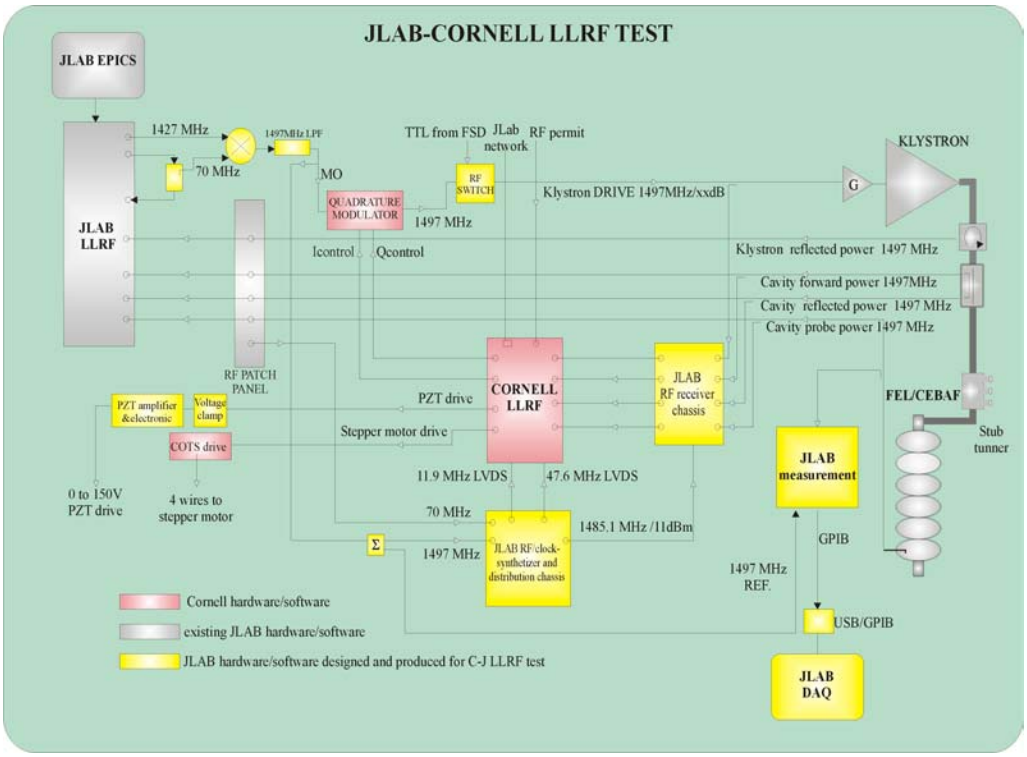

Figure 1 Block Diagram of the JLAB-Cornell LLRF Test Setup

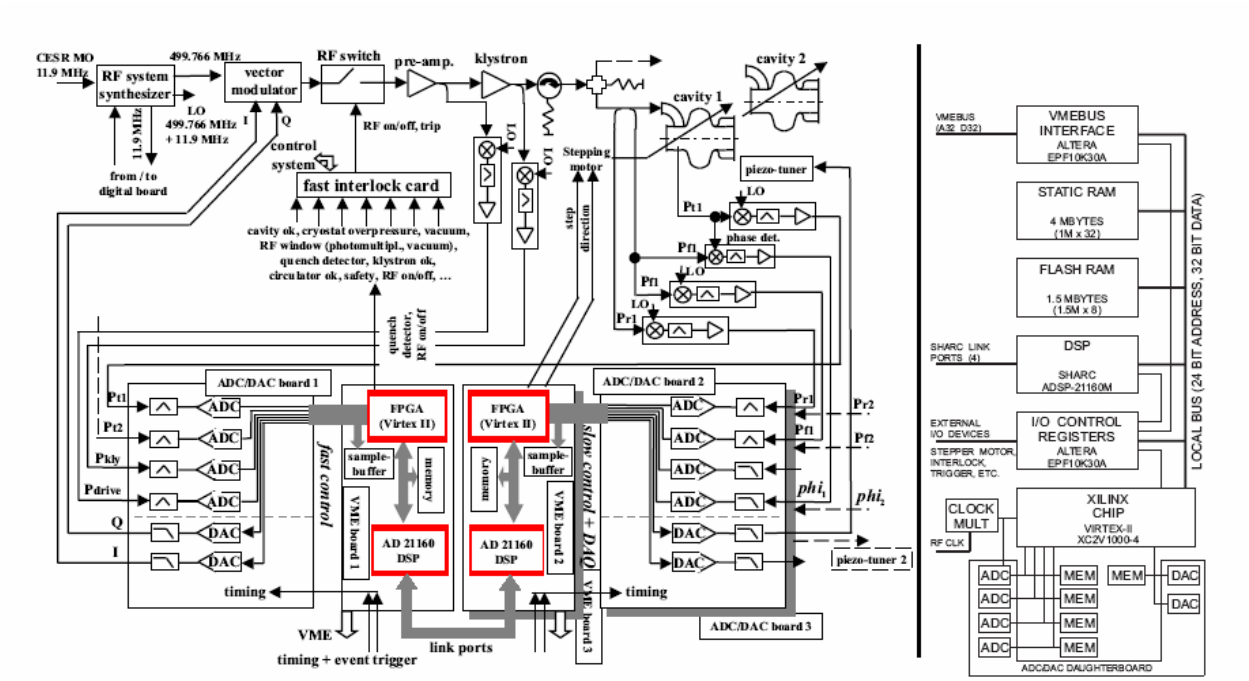

Figure 2 Block Diagram of the Cornell LLRF System

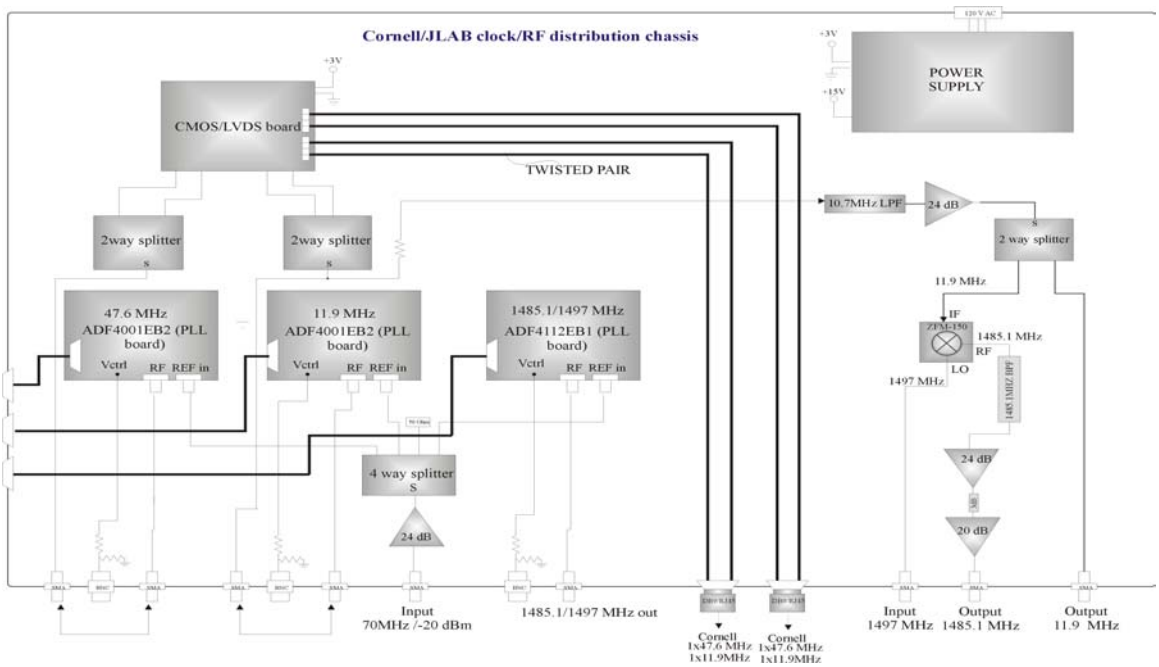

Figure 3 Block Diagram of the Synthesizer.

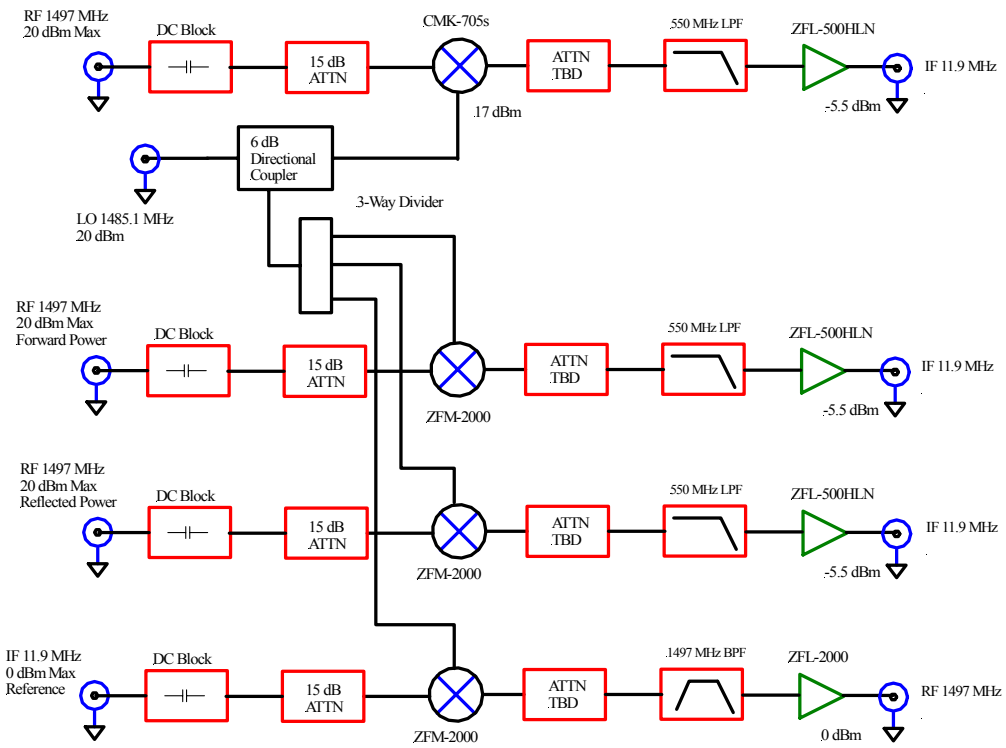

Figure 4 Block Diagram of the Transceiver.

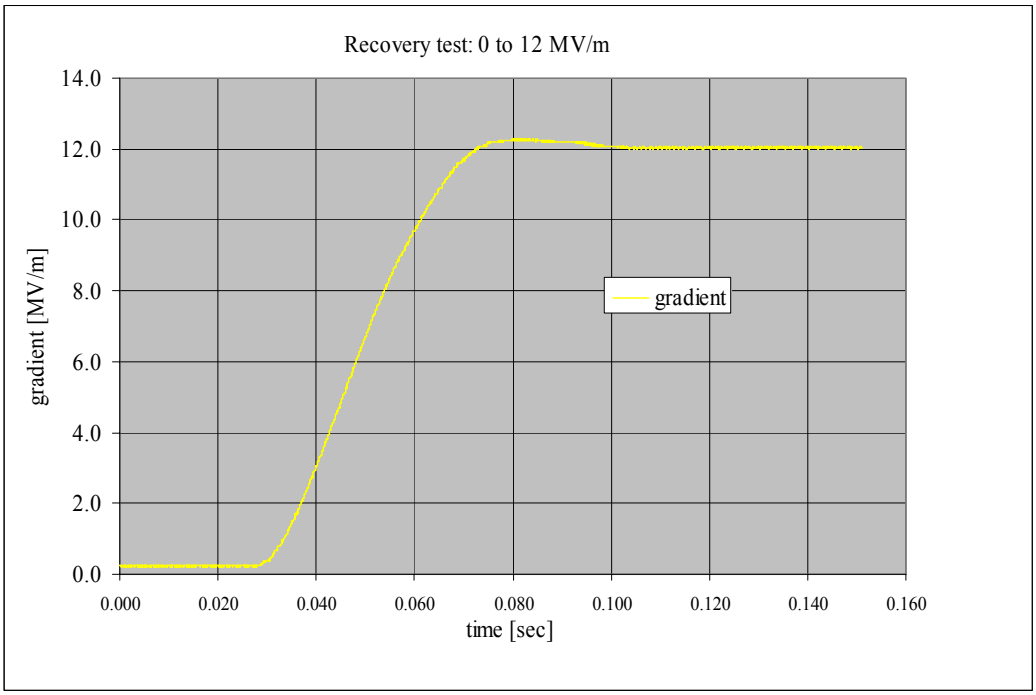

Figure 5 RF fast recovery of the gradient, Qe = $2x10^7$

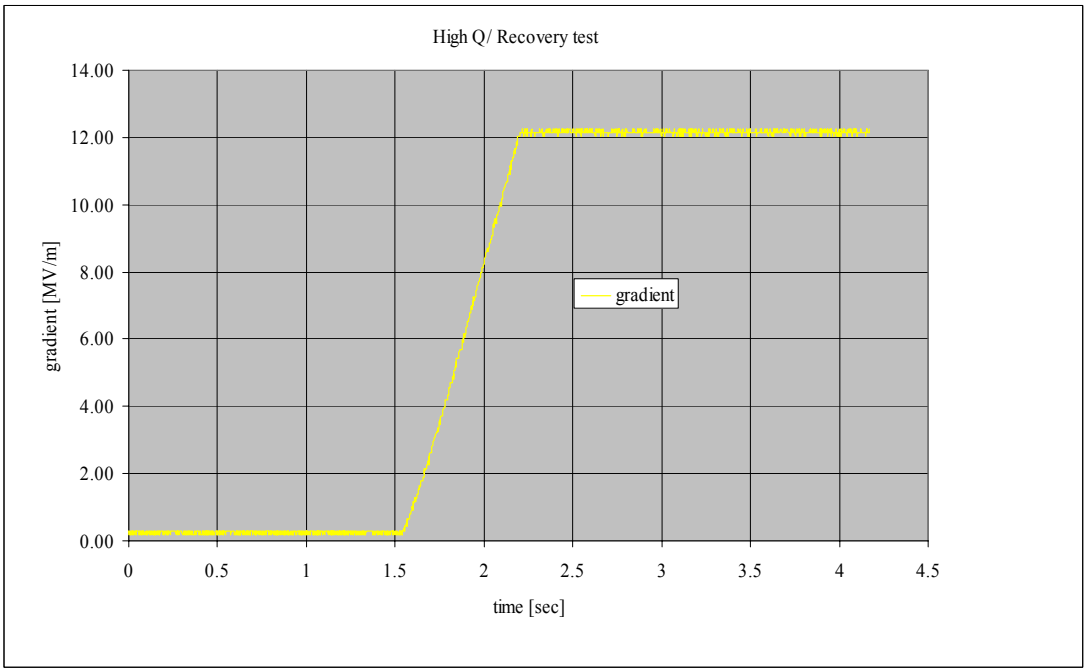

Figure 6 RF fast recovery of the gradient, Qe = $1x10^8$

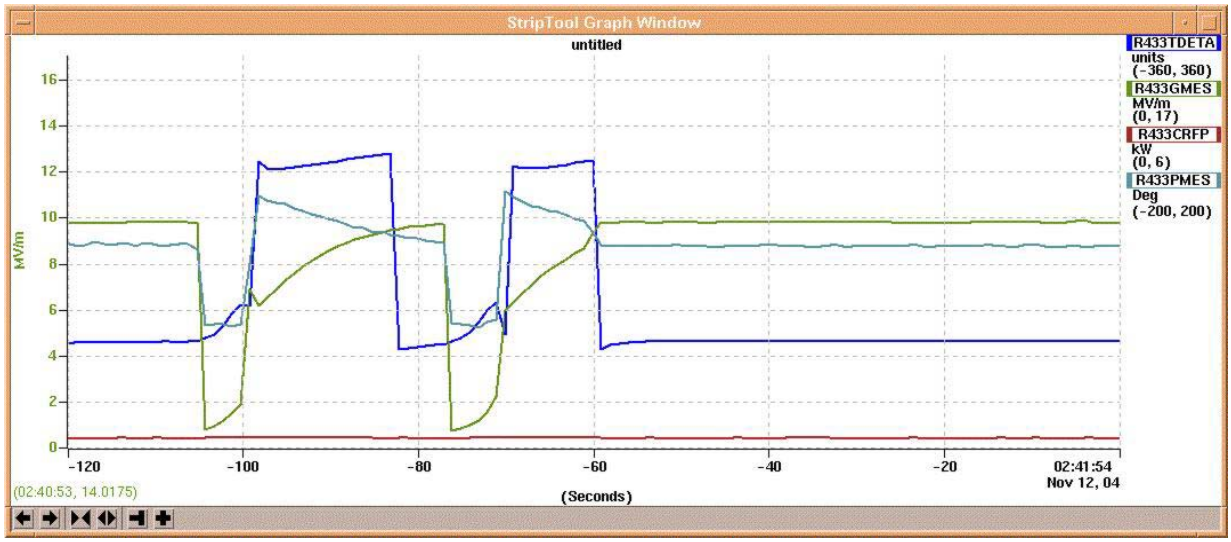

Figure 7 Shows Open loop Resonance Control w/o and w PZT