19 September 2005
JLAB-TN-05-071

Mode-by-Mode Feedback to Alleviate Multipass Beam Breakup

C. Tennant

Abstract

Simple considerations of the driving force from a cavity higher-order mode that leads to beam breakup (BBU) are presented to show how beam-based feedback can be effective at suppressing the instability. In particular we consider how BBU lends itself to using a mode-by-mode feedback system. Such a system is described and a prototype feedback processor is presented. We also give an expression for the threshold current including the effects of the feedback system and show that, in principle, effective suppression of BBU can be achieved.

Introduction

There has been extensive work within the past two years aimed at gaining a better understanding of the multipass beam breakup (BBU) instability. This work has been performed through simulations, analytic models and experimental measurements. A great deal has been learned about methods to suppress the instability using *Q*-damping schemes and beam optical suppression techniques. While these beam optical techniques showed excellent results, the resulting restraints placed on the machine optics makes setting the machine up for optimal lasing performance difficult. Therefore, this note gives a brief outline for a beam-based feedback system which may prove to be effective at suppressing BBU.

Driving Force of BBU

We specifically wish to consider the case of a particle driven by a transverse higher-order mode (HOM) of a resonant cavity. In this simple model we are not concerned with the details of the instability, but rather are more concerned about understanding how best to utilize a feedback system to combat BBU. We know that BBU is caused by a narrowband resonance from a transverse HOM and to describe the effect on the particle motion we need the wake force. Note that for a resonant cavity, the wake *function* for a single dipole mode is given by [1]

$$W(t) = \left(\frac{R}{Q}\right)\frac{\omega_o^2}{2c} e^{-\omega_o t/2Q} \sin(\omega_o t) \tag{1}$$

where *(R/Q)* is the shunt impedance, *Q* is the loaded quality factor and ω_o is the angular frequency of the mode. One can also define the wake *potential* as [2]

$$\int_{-L/2}^{L/2} F_\perp ds = -eq\langle x\rangle W(t) \tag{2}$$

where q is the exciting charge which induces the wake field which is subsequently felt by a test charge, e, a time t later, $\langle x\rangle$ is the off-axis displacement of the test charge and $W(t)$ is given by Eqn. (1). The integration is performed over the length of a cavity period. We will define an "effective" wake force by considering the integrated effect over a cavity period. That is,

$$F_\perp^{eff}(t) \equiv -\frac{eq\langle x\rangle W(t)}{L_c}\,. \tag{3}$$

For the case of a two-pass ERL we assume the particle on the first pass excites and induces a wake field which is then felt by on the second pass by a particle displaced by an amount $\langle x\rangle$. This displacement can be expressed in terms of HOM and lattice parameters as

$$\langle x\rangle = M_{12}\frac{V_\perp}{V_b} \tag{4}$$

where M_{12} is the element of the recirculation matrix that translates a horizontal angular kick on the first pass to a horizontal displacement on the second pass, $V_\perp$ is the transverse HOM voltage applied to the particle and V_b is the beam voltage (i.e. $p_b(c/e)$) at the cavity. Combining Eqns. (1), (3) and (4) we obtain for the effective wake force

$$F_\perp^{eff}(t) = -\left(\frac{e^2 M_{12}(R/Q)}{2cL_{cav}}\right)\left(\frac{V_\perp}{V_b}\right)\omega_o^2 e^{-\omega_o t/2Q}\sin(\omega_o t)\,. \tag{5}$$

For simplicity, we will write

$$F_\perp^{eff} \equiv -\alpha f_\perp(t) \tag{6}$$

where

$$\alpha = \left(\frac{e^2 M_{12}\omega_o(R/Q)Q}{2cL_c}\right)\left(\frac{V_\perp}{V_b}\right)$$

and

$$f_\perp(t) = \left(\frac{\omega_o}{Q}\right)e^{-\omega_o t/2Q}\sin(\omega_o t)$$

Equation (6) represents the functional form of the driving force that leads to multipass BBU. With this in mind, we will see how a feedback can most effectively be implemented to combat the onset of BBU.

Bunch-by-Bunch Feedback

In a storage ring, the free-oscillations experienced by a particle under the restoring force of external focusing can be modeled as a simple harmonic oscillator

$$\ddot{x} + \omega_\beta^2 x = 0 \tag{7}$$

where ω_β is the (horizontal) betatron frequency. Storage rings are also plagued by multibunch instabilities. Although these instabilities are fundamentally different than BBU, beam-based feedback is required to stabilize the system. For many years now, bunch-by-bunch feedback systems have been successfully utilized and their advantage comes from the fact that detailed knowledge of the driving force, $F_\perp^{eff}(t)$, is *not* required. That is to say, with a sufficiently large feedback gain, the unstable motion can be stabilized by introducing a damping term into the equation of motion

$$\ddot{x} + g\dot{x} + \omega_\beta^2 x = F_\perp^{eff}(t) \tag{8}$$

where g is the gain. In principle, such a system would be effective at suppressing BBU. However, the challenges of implementing a bunch-by-bunch feedback system in a relatively small, two pass ERL such as the FEL Driver, are prohibitive. We consider instead, a mode-by-mode feedback system.

Mode-by-Mode Feedback

In the case of multipass BBU we have detailed knowledge about the nature of the driving force that causes the instability, specifically the frequency at which it is strongly peaked, ascertained either from measurements or simulations. The idea of the mode-by-mode feedback is to take advantage of that knowledge. Consider the Fourier Transform of Eqn. (6). Using the relation

$$F.T.\left[e^{-at}\sin(\omega_n t)\right] = \frac{\omega_n}{(a+i\omega)^2 + \omega_n^2} \tag{9}$$

one finds

$$f_\perp(\omega) = -\frac{(1/Q)}{1+\left(\frac{1}{2Q} + i\frac{\omega}{\omega_o}\right)^2} \tag{10}$$

where $f_\perp(\omega)$ is the Fourier Transform of $f_\perp(t)$ and is also referred to as the impedance of the HOM. For convenience, we can rewrite Eqn. (10) in terms of an amplitude and phase

$$f_\perp(\omega) = A(\omega)e^{-i\phi(\omega)}. \tag{11}$$

If we consider only the amplitude, *A(ω)*, we obtain

$$A(\omega) = \frac{1}{\sqrt{Q^2\left(1+1/4Q^2-\left[\omega/\omega_o\right]^2\right)^2+\left[\omega/\omega_o\right]^2}} \tag{12}$$

which is sharply peaked when $\omega \approx \omega_o$ (see Fig. 1).

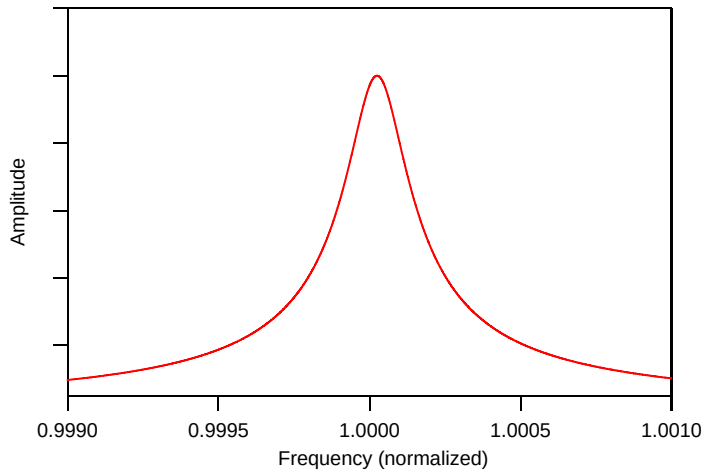

Figure 1: Plot of Equation (12) where the normalized frequency is defined as ω/ω_o.

Whereas for bunch-by-bunch feedback we sought to provide a damping term, for a mode-by-mode feedback we can (if we have sufficient knowledge of the driving force) arrange for the feedback system to provide a term that cancels the driving term. That is, we want to effectively cancel the driving wake force so that

$$A(\omega)e^{-i\phi(\omega)} + A_{FB}(\omega_o)e^{-i(\phi(\omega_o)+\pi)} = 0 \tag{13}$$

where $A_{FB}(\omega_o)$ is generated by the feedback system at the frequency where the driving force is sharply peaked. The following section discusses a practical implementation of this scheme in the Jefferson Laboratory FEL Upgrade.

Practical Implementation

The basic components of a generic feedback system are: (1) a device to detect unstable beam oscillations (which is typically a beam position monitor) (2) a receiver to

process the signal created by the beam and generate an error signal and (3) a kicker driven by the error signal which stabilizes the beam. The key to the mode-by-mode feedback is that the effect of a harmful HOM leaves a unique signature on the beam spectrum. By imparting a transverse deflection on the beam, the HOM effectively amplitude modulates the beam with its own particular frequency. If one considers the frequency-domain structure of the beam signal, the HOM manifests itself as a sideband of the beam frequency harmonics. By using an appropriately tuned receiver, the sideband can be detected and used to generate an error signal.

A prototype feedback processor is depicted in Fig. 2. An error signal is generated by using a slightly modified "difference-over-sum" algorithm. Signals from opposing striplines (e.g. top and bottom) of a BPM are bandpass filtered at 1497 MHz. The BPM has a good response and the signal should be sufficiently strong at this frequency. The top and bottom signals are then connected to a 180 degree hybrid coupler (see Appendix A). Care must be taken to ensure that the signals arrive at the coupler in-phase which can be achieved by carefully matching cable lengths coming from each stripline. The signal of interest is the difference signal which is proportional to the current moment. Dividing by the sum of the striplines *(T+B)*, yields the desired intensity independent signal. For a given charge per bunch the sum signal is constant, and so to reduce the complexity of the system, the process of dividing by the sum signal is replaced by attenuation to provide the proper normalization (not explicitly shown in the schematic). The resulting signal is downconverted to baseband using a mixer and the 1497 MHz master oscillator frequency as the LO input. The output is then bandpass filtered at the frequency at which the particular HOM exhibits a sideband. For example, BBU studies in January 2005 determined that with the particular machine setup at the time, the instability was driven by an HOM at 2106.007 MHz. For a repetition rate of 37.425 MHz, the HOM frequency will manifest itself as sidebands at 2106.007 MHz modulo 37.425 (= 10.2 MHz) around the beam harmonics. Once the sideband has been detected, the signal is sent to an amplifier which then is used to drive a stripline BPM as a kicker.

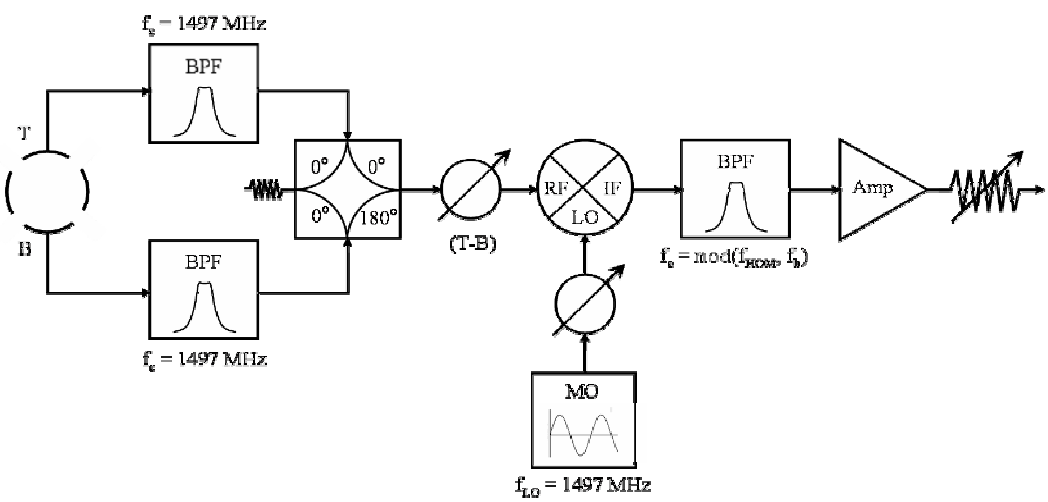

Figure 2: Schematic of a prototype mode-by-mode feedback processor.

Note that the motivation for downconverting the BPM signal is twofold: first, to reduce the complexity and cost of the final bandpass filter which requires a very narrow bandwidth (a bandwidth of even a few MHz with a center frequency at an HOM frequency around 2100 MHz would be prohibitively expensive) and second, at lower frequencies it becomes more efficient to drive a stripline kicker.

Issues

Despite its somewhat simple design, there are still many challenges with regards to implementing the mode-by-mode feedback. One concern is whether a sufficiently strong sideband signal can be detected while the beam is stable. If the sideband only becomes detectable when the beam begins to breakup, then clearly it is too late. A measurement using a spectrum analyzer to look at a signal from a BPM stripline should readily confirm whether an HOM-induced signal can be detected in the region $I_{beam} < I_{threshold}$. Even if the desired signal can be detected, care must be taken to ensure that the processor effectively rejects all other frequencies. This is easier said than done as the beam spectrum consists of a myriad of frequencies, some whose source is well known and others which are not. There is also a concern about the effectiveness of the feedback if the modulating frequency were to have small errors. Since we are essentially feeding back on a narrow bandwidth (high Q) system, even small frequency errors may severely reduce the effectiveness of the feedback. These various issues may be best addressed by direct beam-based measurements after the processor is built.

Implementation

The prototype mode-by-mode feedback that has been described in this section is attractive for a number of reasons. One of the primary reasons is that, in principle, this is a straightforward (and inexpensive) system that could be built and readily tested (of course as the adage goes, “the devil is in the details”).

For testing purposes, until a more permanent solution is found, a BPM in the 2F region could be used as a pickup. The processor (Fig. 2) would be built using connectorized parts. One of the remaining questions, assuming a signal can be detected, is the gain of the amplifier. It is not yet clear how much power will be required to stabilize the beam. Fortunately, this system does not depend on expensive, broadband RF amplifiers. In the past the BPM at location 5F09 had been unused and this would make an ideal location for the kicker. (Remember that the pickup BPM and kicker need to be in regions where there is accelerated beam only).

Setting-up the System

The system described above is very similar to a narrow-band, cavity-based feedback system that was successfully demonstrated in BBU studies earlier in the year. The idea of that feedback was to couple power from one of the cavity’s HOM ports and using a narrowband filter select the HOM frequency of interest, shift the signal 180° in phase, amplify the signal and then return it to the cavity through the same HOM port. With careful tuning of the phase and gain of the feedback loop the Q of the mode could be

damped. The mode-by-mode feedback works essentially on the same principle except that it is beam-based.

The phase and gain of the mode-by-mode system must be carefully tuned so as to suppress (rather than enhance) BBU. This can be achieved by using the beam-transfer function (BTF) measurement which measures the effective Q of the beam-HOM system as a function of average current. The BTF measurement has proved to be very useful in the past as it allows one to measure the threshold at currents *below* the threshold. The goal is to optimize the phase and gain of the feedback loop to the point that the effective Q decreases as the average current increases – this indicates a very high threshold current has been achieved.

Effect on Threshold Current

From our single cavity, single HOM model of BBU one can derive an expression for the threshold current including the effects of the feedback system. This is given by

$$I_{th} = -\frac{2V_b}{k(R/Q)Q(M_{12}\sin(\omega_o T_r) + gM_{12}^{PU}M_{12}^{k}\sin(\omega_{\mathrm{mod}}T_k + \phi)\sin(\omega_o T_d))} \tag{14}$$

where, in addition to the usual quantities, g and ϕ are the gain and phase shift, respectively, of the feedback loop, M_{12}^{PU} translates an angular deflection at the cavity to a displacement at the pickup, M_{12}^{k} translates an angular deflection at the kicker to a displacement at the cavity, T_d includes the time for the beam to travel from the cavity to pickup, for the signal to propagate to the kicker and for the beam to travel from the kicker back to the cavity, and T_k is the time for the beam to travel from the kicker back to the cavity. The derivation of Eqn. (14) is outlined in Appendix B.

Discussion

A few comments are in order concerning Eqn. (14), in particular the second term in the denominator which contains information about the feedback system. First note the importance of the M_{12} elements. Clearly they need to be non-zero, but more than that, the larger this term is, the less gain that is required. A typical value from the FEL Driver for M_{12}^{k} from the 5F09 region to Zone 3 cavity 7 is 10 m, and a typical value for M_{12}^{PU} from the same cavity to a pickup in the 2F region is on the order of 1 m.

It is also useful to look at the threshold current as a function of gain and phase shift, which, as described in a previous section, are the two variable parameters we have in initializing the feedback system. Figure 3 shows the threshold current versus the phase shift for several settings of the gain. Values used in generating the plot are numbers typical of the FEL Driver.

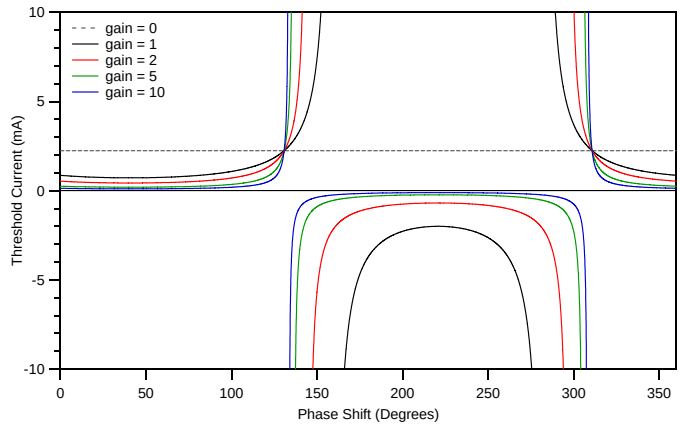

Figure 3: Threshold current vs. phase shift for several gain settings.

Recall that a negative threshold current indicates that the perturbative analysis used in deriving Eqn. (14) is invalid and that the threshold current is very high (on the order of an Ampere) in these regions. Even for small values of the gain, a region of stability can be reached with an appropriate choice of phase shift. As the gain increases, the values of the phase for which the beam is stable become larger.

Conclusion

We remind the reader that the previous analysis has been concerned with a feedback to counter the effects of a *single* dangerous HOM. It may be that many HOMs, each with a different frequency, are capable of causing BBU. In that case, a separate feedback processor ("channel") would have to be implemented for each mode. From a practical standpoint, this precludes implementing an analog mode-by-mode system in such a situation (although perhaps it may be employed digitally). Nevertheless, experience from the FEL has shown that beam currents are typically prohibited by one mode in particular [3]. Thus, even implementing just one channel to feedback on the most dangerous mode can significantly increase the average beam current that can be transported.

Operationally, beam breakup has caused problems in the FEL and in all likelihood will continue to cause problems with the installation of the cryomodule Renascence [4]. While we have demonstrated that beam optical suppression techniques can be effective at raising the threshold current, it would be ideal to have the beam-based feedback stabilize the beam, thereby removing restraints on the machine optics imposed by implementing rotations and reflections. This note has briefly outlined the concept for a prototype beam-based mode-by-mode feedback system which would be well-suited to the FEL.

Appendix A: 180 Degree Hybrid Coupler

See Fig. A for a schematic of a 180 degree hybrid coupler. For typical uses, a signal is applied to port 1 and the output at ports 3 and 4 are of equal magnitude and in-phase. A

signal applied to port 2 results in the output at ports 3 and 4 of equal magnitude but the signal of port 4 will have a phase shift of 180 degrees relative to the output of port 3. Since these devices are bi-directional, for use in the feedback processor, the two in-phase signals of differing amplitudes from the striplines are applied to ports 3 and 4 with the result that the output of port 1 is the sum, and port 2 the difference, of the two inputs.

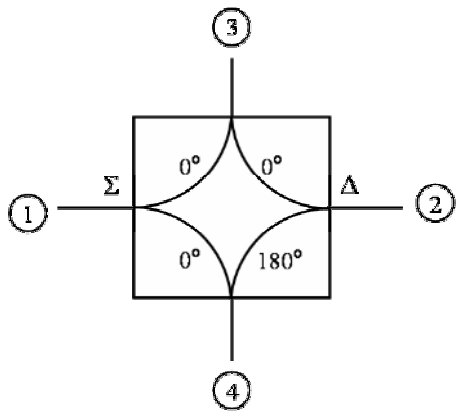

Figure A: Schematic of a 180 degree hybrid coupler.

Appendix B: Derivation of Threshold Current with Mode-by-Mode Feedback

For a single cavity containing a single dipole HOM, the threshold current is given by the familiar expression

$$I_{th} = -\frac{2V_b}{k(R/Q)QM_{12}\sin(\omega_o T_r)} \qquad (1')$$

where, for simplicity, we consider only one dimension (horizontal). The following derivation for the threshold current is based on the formalism used in the theory of control systems. This was first applied to the problem of BBU by E. Pozdeyev who used it to derive an expression for the threshold current with a feedback system [5]. The following derivation considers the effect of a mode-by-mode feedback system as described in the main body of this paper. Figure B is a block diagram of the system we are considering and may be a useful reference throughout the derivation.

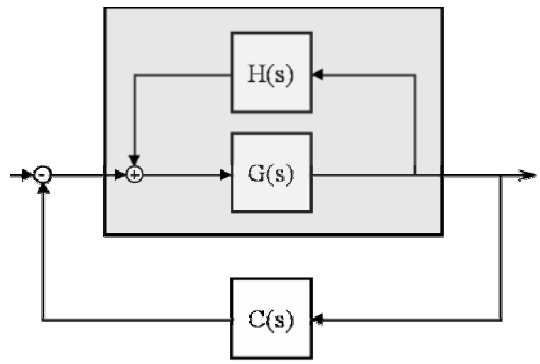

Figure B: Block diagram showing the cavity (G), the feedback loop that produces BBU (H) and the feedback system (C) designed to combat the effects of the instability.

We note that the off-axis displacement of the beam on the second pass is given as the sum of the displacement due to the HOM voltage kick and the displacement produced by the feedback system

$$x^{(2)} = x^{(1)} + x^{(FB)} . \tag{2'}$$

The first term on the right hand side of Eqn. (2') is given by the M_{12} element of the recirculation matrix times the angle produced by the transverse voltage kick on the previous pass

$$x^{(1)} = M_{12} \frac{\overline{V}_{\perp}\left(t - T_r\right)}{V_b} . \tag{3'}$$

The displacement produced by the feedback kicker is the quantity of interest and is expressed as,

$$x^{(FB)} = M_{12}^{k} \theta_k \left(t - T_k\right) \tag{4'}$$

where M_{12}^{k} is the element that translates an initial deflection at the kicker to a displacement at the cavity. The deflection produced needs to be proportional to the kick initially imparted to the beam a time T_d ago and modulates the beam by the down-mixed frequency ω_{mod}. That deflection is described by the following expression

$$\theta_k \left(t - T_k\right) = g M_{12}^{PU} \frac{\overline{V}_{\perp}\left(t - T_d\right)}{V_b} \sin\left(\omega_{\text{mod}} T_k + \phi\right) \tag{5'}$$

where g and ϕ are the gain and phase shift in the feedback loop, respectively, and which are variable parameters. The driving term of the instability is the current moment which we write as

$$\left(\bar{I}x\right)e^{i\omega t} = gI_b M_{12}^{PU} M_{12}^{k} \frac{\bar{V}_\perp\left(t-T_d\right)}{V_b} \sin\left(\omega_{\text{mod}} T_k + \phi\right) e^{i\omega(t-T_d)} \tag{6'}$$

Taking a Laplace Transform of Eqn. (6') we obtain

$$\bar{I}x(s) = g\frac{I_b}{V_b} M_{12}^{PU} M_{12}^{k} \bar{V}_\perp(s) \sin\left(\omega_{\text{mod}} T_k + \phi\right) e^{-i\omega T_d} e^{-sT_d} \tag{7'}$$

The transfer function for the feedback system, *C(s)*, is given by

$$C(s) = \frac{\bar{I}x(s)}{\bar{V}_\perp(s)} = g\frac{I_b}{V_b} M_{12}^{PU} M_{12}^{k} \sin\left(\omega_{\text{mod}} T_k + \phi\right) e^{-i\omega T_d} e^{-sT_d}\,. \tag{8'}$$

The closed-loop transfer function for the cavity, *G(s)*, is given by

$$G_{CL}^{(FB)}(s) = \frac{G(s)}{1-[H(s)+C(s)]G(s)} \tag{9'}$$

where

$$G(s) = -\frac{i\,k(R/Q)\omega_o/4}{s+\dfrac{\omega_o}{2Q} - i\left(\omega_o - \omega\right)}$$

and

$$H(s) = I_b \frac{M_{12}}{V_b} e^{-sT_r} e^{-i\omega T_r}\,.$$

We are searching for the current at which the system goes unstable thus marking the onset of BBU. To ensure stability, all poles of the closed-loop transfer function must be in the left hand side of the complex plane. The poles of Eqn. (9') are given by the values of *s* that satisfy

$$s + \frac{\omega_o}{2Q} - i\left(\omega_o - \omega\right) + i\frac{\omega_o}{2Q}\frac{k(R/Q)QI_b}{2V_b}\left[M_{12}e^{-sT_r}e^{-i\omega_o T_r} + gM_{12}^{PU}M_{12}^{k}\sin\left(\omega_{\text{mod}}T_k + \phi\right)e^{-sT_d}e^{-i\omega_o T_d}\right] = 0$$

which is a transcendental equation. To solve this analytically, we make the approximation that the last term in the above equation is small compared to the other terms and write

$$s_o = -\frac{\omega_o}{2Q} + i\left(\omega_o - \omega\right). \tag{10'}$$

Substituting Eqn. (10') for s in the exponentials and requiring that the real part of the poles be less than zero (to ensure stability) leads to the condition

$$-\frac{\omega_o}{2Q}\left\{1+\frac{k(R/Q)QI_{th}}{2V_b}\left[M_{12}\sin(\omega_o T_r)e^{\omega_o T_r/2Q}+gM_{12}^{PU}M_{12}^{k}\sin(\omega_{\mathrm{mod}}T_k+\phi)\sin(\omega_o T_d)e^{\omega_o Td/2Q}\right]\right\}=0$$

Solving for the threshold current yields

$$I_{th}=-\frac{2V_b}{k(R/Q)QM_{eff}} \qquad (11')$$

where

$$M_{eff}\equiv M_{12}\sin(\omega_o T_r)e^{\omega_o T_r/2Q}+gM_{12}^{PU}M_{12}^{k}\sin(\omega_{\mathrm{mod}}T_k+\phi)\sin(\omega_o T_d)e^{\omega_o T_d/2Q}\,. \qquad (12')$$

Although the exponentials come out naturally from the derivation, from previous assumptions that are made about the model, one can safely ignore these terms as they are nearly unity for the high Q modes in the relatively small FEL Driver (i.e. small T_r and T_d) that we are considering.

References

[1] N. Sereno, "Experimental Studies of Multipass Beam Breakup and Energy Recovery Using the CEBAF Injector Linac", Ph.D. Thesis, University of Illinois at Urbana-Champaign (1994).

[2] A. Chao, Physics of Collective Beam Instabilities in High Energy Accelerators, John Wiley & Sons, New York (1993).

[3] For example, in the January/February BBU studies, we demonstrated that we could increase the threshold current due to the dangerous 2106 MHz mode to greater than 10 mA via the phase trombone. Following this suppression, we attempted a high current run and achieved 7 mA of average beam current with no indications of BBU from other HOMs.

[4] K. Beard, E. Pozdeyev and C. Tennant, "Estimates of Beam Breakup Thresholds in the 10 kW FEL with the Renascence Cryomodule", JLAB-TN-05-060, (2005).

[5] E. Pozdeyev, "BBU as a Feedback and a Feedback for BBU", *Unpublished*, (2004).