Technical Basis for Calibration Factors Applied to AMS-4 Air Samplers

Summary

This Tech Note briefly describes the process used to establish detector efficiency settings for the Eberline model AMS-4 air monitor when used to monitor accelerator enclosures for activation gases. The work was conducted over a period of several years during the late 1990s. The results were packaged into a poster presentation and presented at the 33rd annual midyear meeting of the Health Physics Society. The poster presentation is appended to this summary.

Monte Carlo calculations of the detector response from calibration sources were normalized to empirical measurements. This response was then corrected for the difference between the discrete disc geometry of the calibration sources and the volumetric geometry of the counting chamber itself.

The resulting energy response curve should be the basis for determining the appropriate efficiency correction factor to be used during calibration of the instrument.

The need for such a correction factor stems from the differences in response of the instrument to different radionuclides in the sample chamber. Nuclide-specific correction factors are provided by the instrument manufacturer for monitoring noble gases, but not for the nuclides of concern at Jefferson Lab (in particular, N-13).

The efficiency correction factor indicated from the corrected energy response curve is approximately 15% higher than the value which has been historically used (which was taken directly from the empirical source response data). It should be noted that this value is somewhat lower (more conservative) than the value resulting from modeling N-13 specifically based on a parameterized positron emission spectrum. The correction factor is also considerably more conservative than that which might be arrived at by extrapolation of manufacturer's noble gas data (though, as the present work indicates, such extrapolation is likely fraught with error). Altering the calibration procedure to make use of the slightly higher value will result in a correspondingly lower indicated airborne radioactivity concentration, but we conclude that the measured value is more accurate and remains reasonably conservative.

Adaptation of the Eberline AMS-4 Noble Gas Monitor for Use with Accelerator Produced Positron Emitting Gases

Author

K. B. Welch, S. O. Schwahn, R. T. May

Abstract

The Eberline AMS-4 is a real-time portable air monitor designed and factory calibrated for noble gases such as Kr-85 and Xe-133. Thomas Jefferson National Accelerator Facility operates a 4+ GeV electron accelerator designed for basic nuclear research, and a (currently) 50+ MeV electron accelerator which drives an IR Free electron laser. Gaseous positron emitting radioisotopes of oxygen, nitrogen, and carbon are produced during the operation of both facilities and the AMS-4 is used for periodic measurements at a series of locations to confirm calculations and/or to light signs when concentrations in excess of 0.1 DAC may be present in accessible areas. The calibration of the AMS-4 using a monte-carlo simulation of the detector response and a mock gas standard is discussed.

Meeting

This abstract was presented at the 33rd Annual Midyear Meeting, "Instrumentation, Measurements, and Electronic Dosimetry", Abstracts Session, 1/30/2000 - 2/2/2000, held in Virginia Beach, VA.

Calibration of the Eberline AMS-4 for Positron Emitting Gaseous Radionuclides

Keith Welch
Scott Schwahn
Robert May

Radiation Control Group
Thomas Jefferson National Accelerator Facility

Introduction

Thomas Jefferson National Accelerator Facility is a DOE owned, contractor operated physics research facility.

The main accelerator, the Continuous Electron Beam Accelerator Facility (CEBAF) is a dual linac 6 GeV, 1000 kW electron facility housed in a 7/8 mile recirculating ring with 3 experimental halls.

Jefferson Lab's Free Electron Laser is based on a 40 MeV , 5 mA electron linear accelerator, producing 1 kW laser power, tuneable from infrared to UV.

The Jefferson Lab accelerators are the first to employ large scale, superconducting RF technology for CW operation.

Radiation Source Term

During accelerator operation, airborne radioactivity is produced primarily by high energy photon interactions (γ , n). The predominant activation products are neutron deficient isotopes of oxygen and nitrogen, decaying by positron emission. Formation of other radionuclides (eg. H-3, Be-7, C-11) occurs but concentrations are usually insignificant.

Nuclide	Half-life	Radiation Emitted	Maximum β^+ Energy (MeV)	Average Energy (MeV)
N-13	~ 10 m	β^+	1.19	0.492
O-15	~ 2 m	β^+ , ε	1.72	0.735

Main contributors to airborne radioactivity during accelerator operation

In practice, N-13 can be considered the single nuclide of concern.

Measurement Technology Selected

The Eberline AMS-4 air monitor was chosen to measure airborne activation products during beam operation. A “noble gas” configuration of the instrument is used.

Selection of AMS-4 based primarily on:

- Operational Flexibility – compact, portable
- Sensitivity – MDC is ~ 0.1 DAC
- Data logging – microprocessor driven, local data storage
- Alarms and remote communication – all operational parameters password protected, communication via computer network/modem, local interface to PC

Factory calibration parameters are based on Xe-133 and Kr-85 low energy beta emitters. Accurate measurement of N-13 in accelerator enclosures requires correction for high energy positrons.

Considerations for N-13 Monitoring

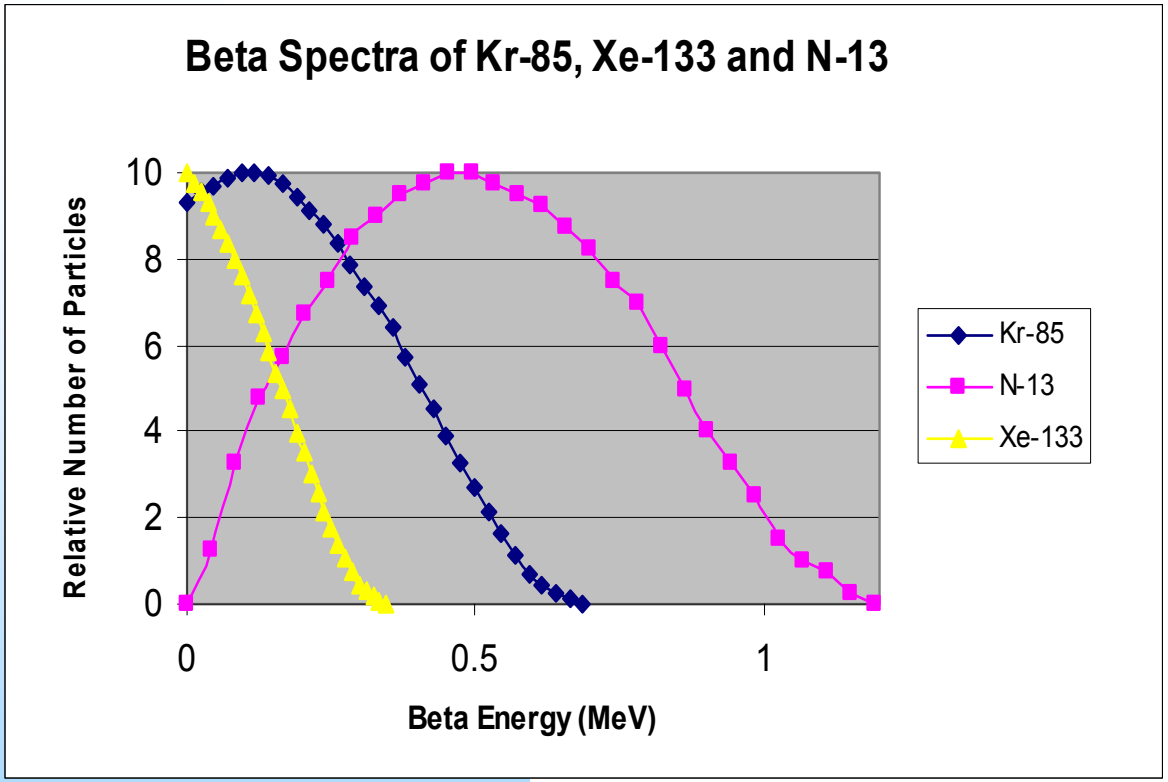

- Significantly higher energy than calibration gases
- Energy distribution differences between beta and positron radiations

Curves are normalized interpolations of theoretical beta spectra

Techniques for Extending Calibration to Higher Energy

- Factory calibration performed with noble gas standards
- Simple method desired that did not require gas standards
- Combination of analytical and Monte Carlo techniques chosen
  - Analytical
    - Mock gas sources of several energies
  - Monte Carlo
    - MCNP calculations to normalize mock gas standards

Description of Analytical Methods

- "Mock-gas" sources used – multiple disc sets
- Three nuclides chosen to span wide energy range

Nuclide	Max Beta Energy (MeV)	Average Beta Energy (MeV)
Tl-204	0.763	0.244
Sr-89	1.49	0.583
P-32	1.71	0.695

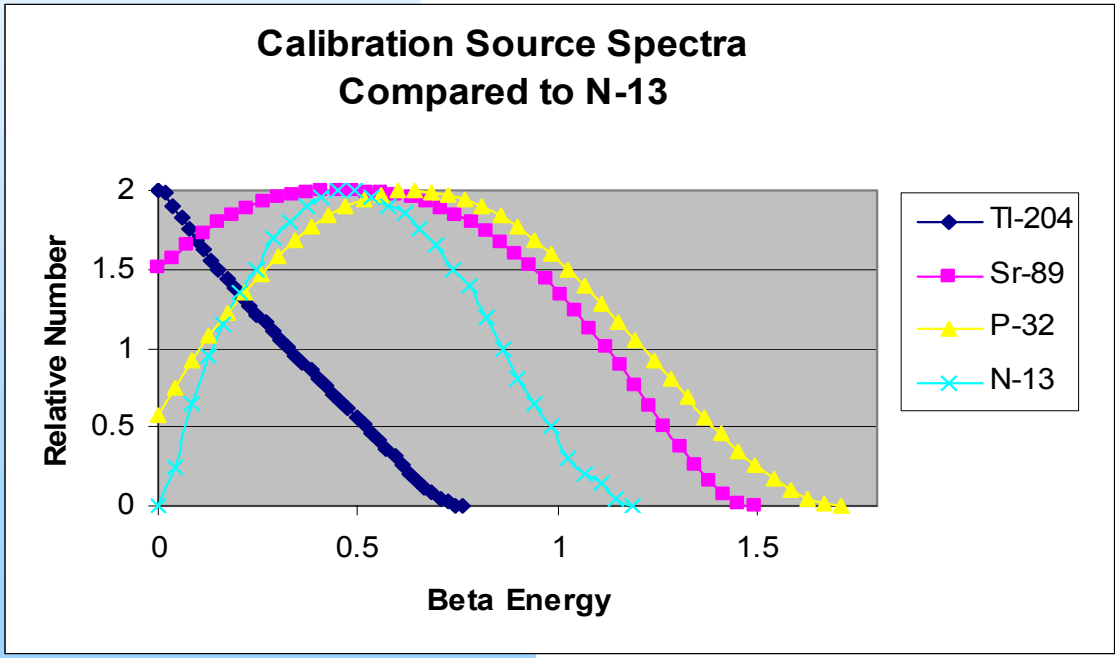

Description of Analytical Methods

Mock gas standard characterization

Sample Head/Detector Configuration

Modified head with a source disk installed

Exploded view of modified sample head with sources

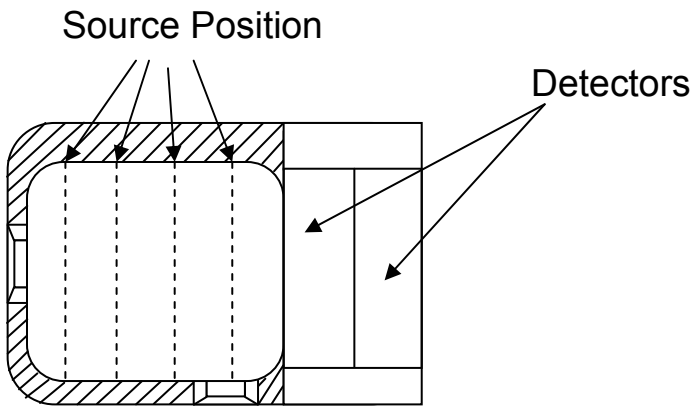

Source positioning in test head

Analytical Results and MCNP Analysis

Developing the MCNP model

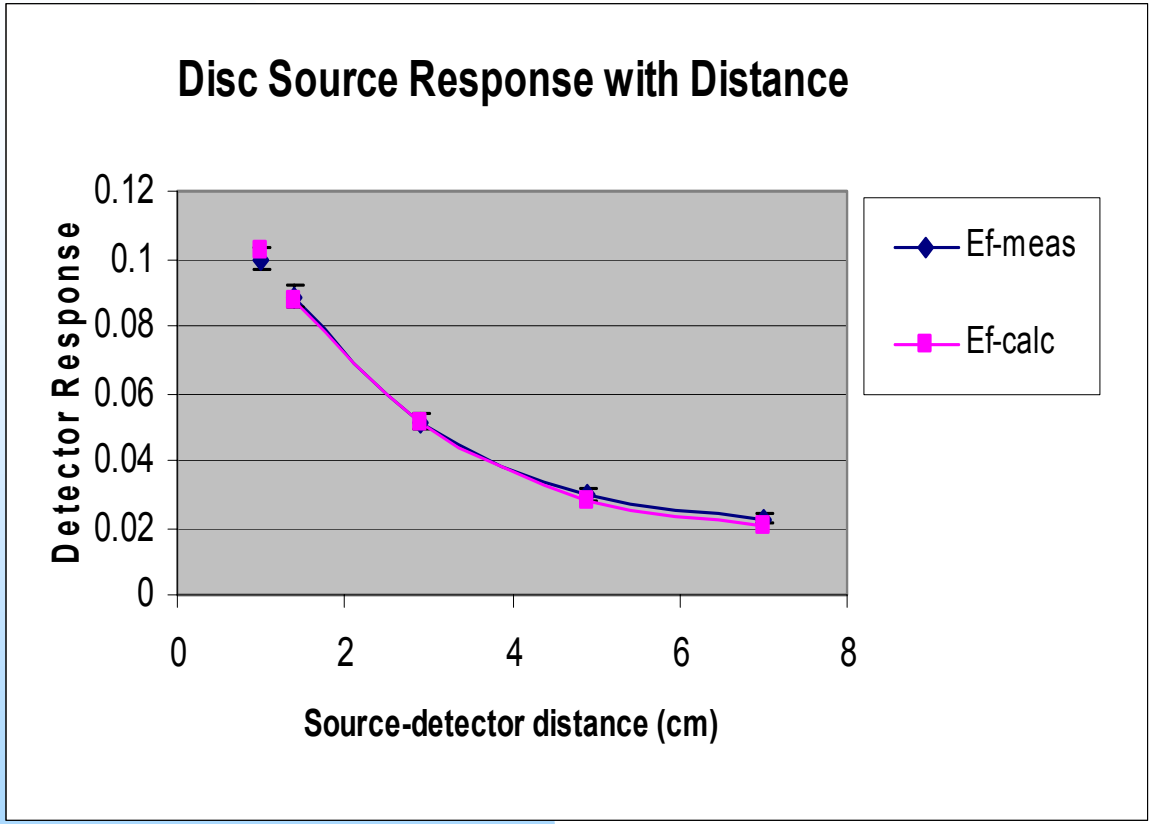

Measured efficiency with distance compared to calculated efficiency

A Tl-204 disc was counted at various distances. The MCNP energy threshold was adjusted to match detector response at 1 cm using the parameterized Tl-204 beta spectrum. Excellent agreement was obtained for response at other distances.

Analytical Results and MCNP Analysis

Applying the MCNP model

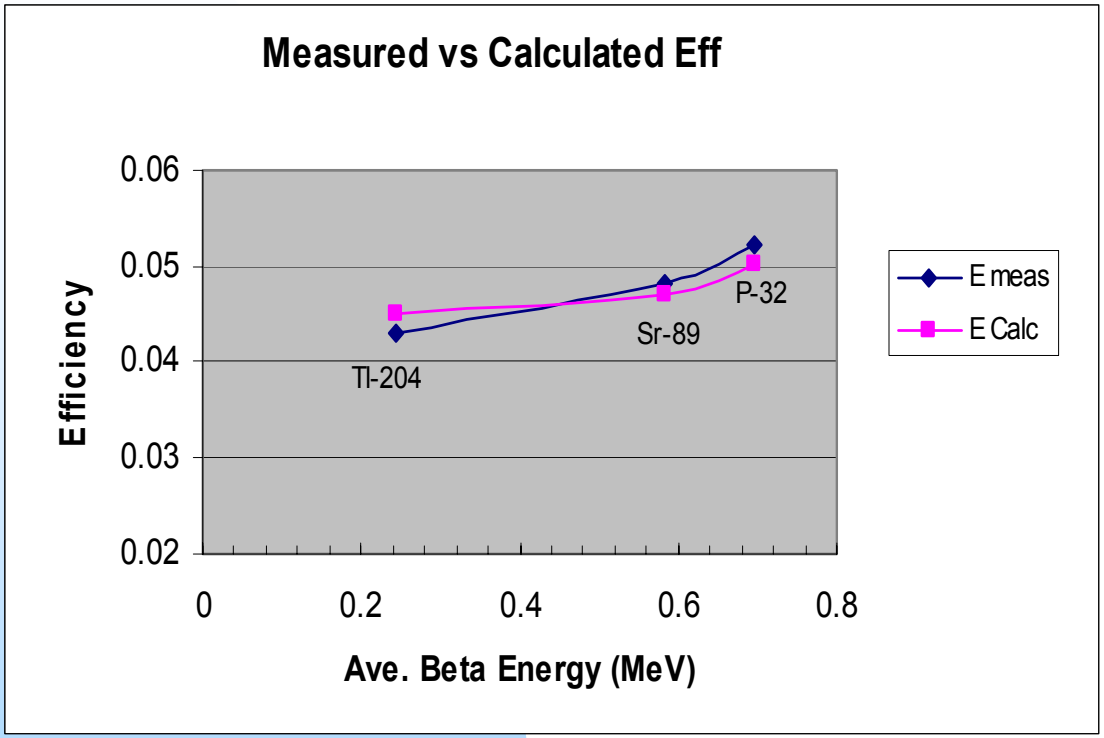

Measurement data from mock gas sources compared to calculations for disc source geometry

Note: Data is displayed on abscissa of average beta energy for convenience. Response calculated on individual beta spectra. A smooth function of energy is not implied.

MCNP calculations were performed using beta energy parameters for each calibration source. Agreement with measurements is within 5%.

Analytical Results and MCNP Analysis

Applying the MCNP model

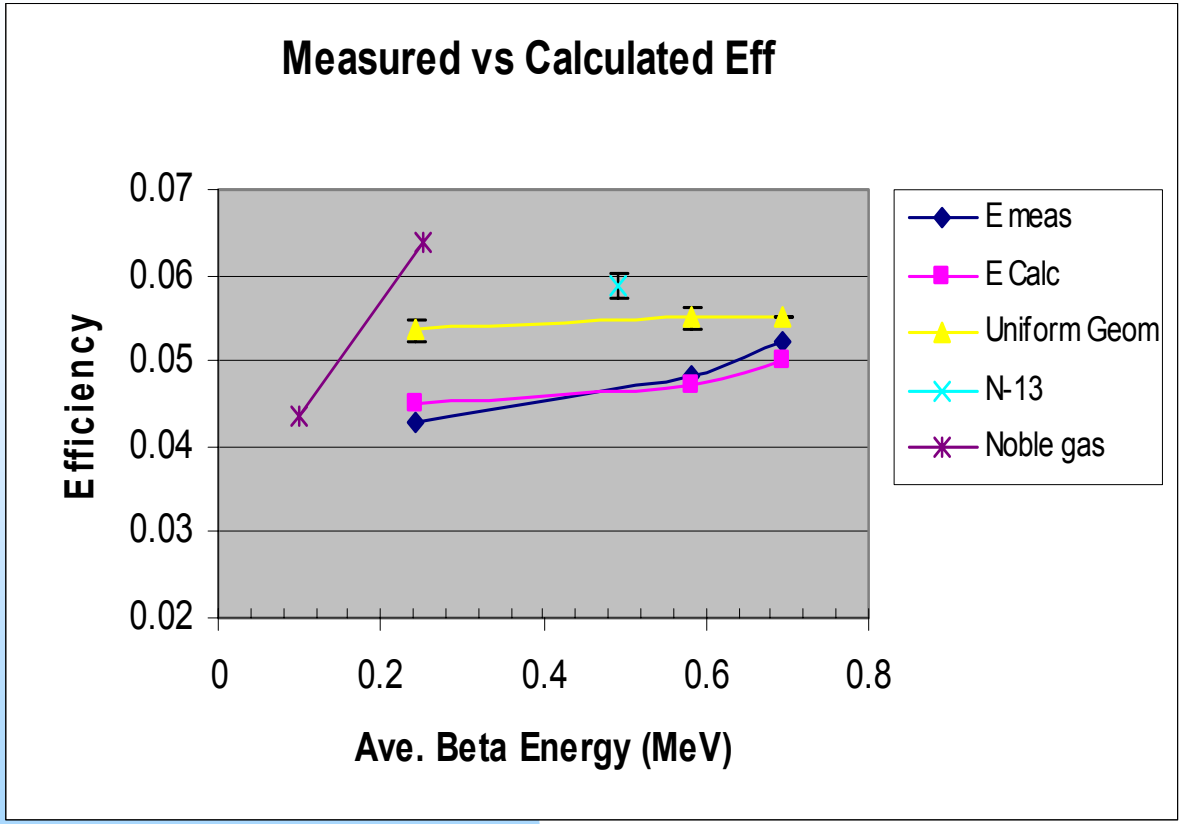

Values for discrete sources were corrected for a uniform sample geometry.

N-13 response calculated using parameterized positron spectrum and uniform geometry.

Results of manufacturer's noble gas calibration shown for comparison. Modeled response for these nuclides was not in good agreement with published calibration data (>25%).

Choosing a geometry corrected response to the mock gas sources appears to yield a conservative estimate of actual N-13 efficiency.

Summary and Conclusions

- When corrected for geometry, the modeled response of the detector to the mock gas sources is similar to the calculated response to N-13 (a difference of about 6%).
- Further work is needed to validate the correlation of the corrected mock source response to field measurement conditions, but it is believed that use of the current model is conservative.
- The calculations depend strongly on detector energy threshold selection.
- Beta/positron energy distribution differences between nuclides with similar E_{max} or E_{ave} make estimation of detector response based on these parameters problematic.
- Further work is needed to resolve differences in calculated response and manufacturer's calibration data.